Set Collars with Setscrew-Wide Type

固定環-止迴螺絲固定-寬廣型

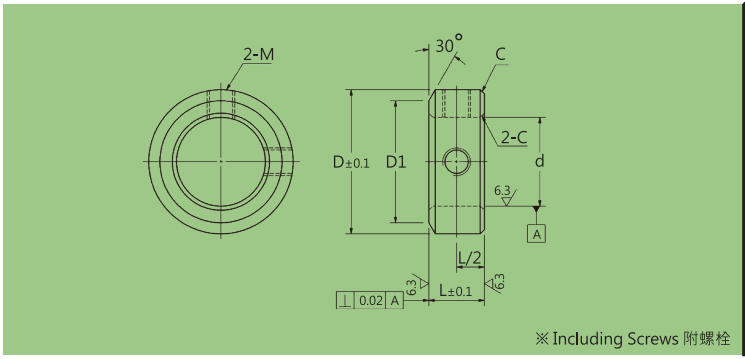

HFB021



Type 品名	Material 材質	Surface Treatment 表面處理	Delivery 交貨日
HFB021-A	S45C 中碳鋼	Blackening 染黑	7 Working Days 7 個工作日
HFB021-B		Nickel Electroless 鍍無電解鎳	
HFB021-C	SUS304 不鏽鋼	-	

ID. TOL. 內徑公差	
d	H7
5~6	+0.012 0
8~10	+0.015 0
12~15	+0.018 0
20~30	+0.021 0
35~50	+0.025 0

Type	d	L	D	D1	C	Screw 螺栓規格
HFB021-A HFB021-B HFB021-C	5	6/8	14	14	0.5	M4X4
	6	6/8	15	15	0.5	M4X4
	6	10	16	16	0.5	M4X4
	8	8	16	13	0.5	M4X4
	8	10	18	13	0.5	M4X4
	10	8	18	16	0.5	M4X4
	10	10	20	16	0.5	M4X4
	12	8	22	20	0.5	M4X4
	12	10/12	26	20	0.5	M5X5
	13	8	22	20	0.5	M4X4
	13	10	26	20	0.5	M5X5
	15	8/10	25	24	0.5	M5X5
	15	12	28	24	0.5	M5X5
	20	10/12/15	32	29	0.5	M6X6
	25	12/15/18	42	38	0.5	M6X6
	30	16	45	42	1	M8X8
	30	20	49	42	1	M8X8
	35	20	59	47	1	M8X8
	40	20/22	72	55	1	M10X10
	50	25	79	65	1	M10X10

Order Ex. 訂購範例

HFB021-□-3-L

- A B or C — 選擇材質和表面處理方式
- ID. — 軸孔內徑
- Length of Set Collar — 選擇固定環長度

※u=unit