Rolled_SFT

Shaft Diameter Ø8~Ø10

Features

1. The economical model can meet most of the feeding devices.
2. The micro-diameter type saves a lot of space in the organization.
3. Lower profile linear units can be designed by using in combination with Support Units Low Profile Type.
4. Conforms to JIS (ISO) accuracy standards.
5. Standards dimensions in stock.
6. Oil inlet on the nut, easily use while assembling and maintaining.

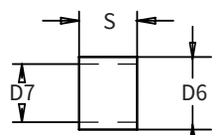

Including Collar

Material：S45C
Treatment：Fe3O4

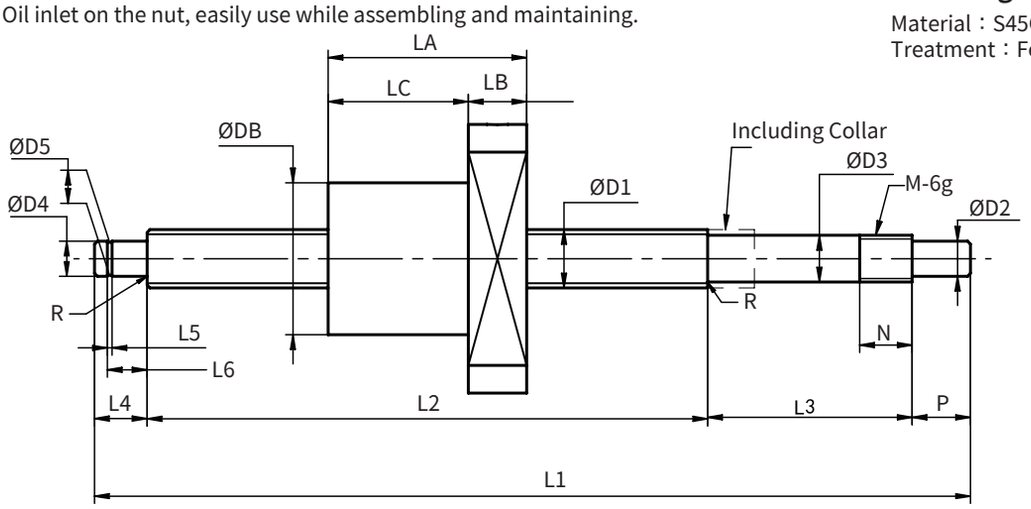

Model	Outer diameter	Lead	Screw Specification																
			L1	L2	L3	L4	L5	L6	P	D1	D2	D3	D4	D5	D6	D7	S	N	M	R
SFT0802	8	2	100~400	L1-46	29.5	9	0.8	6.8	7.5	8	4.5	6	6	5.7	9.5	6	7	7	M6x0.75	Less than 0.3
SFT1002	10	2	150~585	L1-54	35	9	0.8	6.8	10	10	6	8	6	5.7	10	8	8	9	M8x1.0	Less than 0.3
SFT1004	10	4	150~600	L1-54	35	9	0.8	6.8	10	10	6	8	6	5.7	10	8	8	9	M8x1.0	Less than 0.3

End Plug Miniature Type Nut

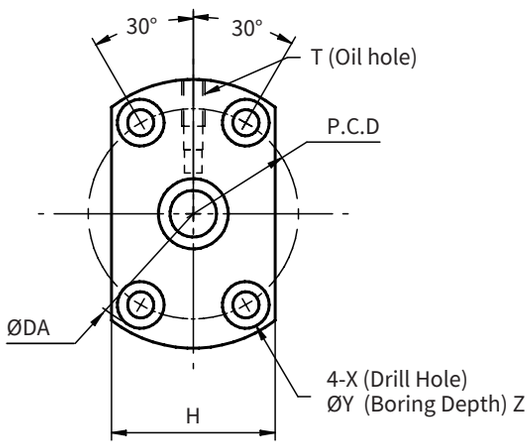

Ball Screw Specification	
Precision	C10
Circulation method	End plug type micro-diameter type
Axial backlash Preload level	P0:No preload, with backlash
Screw Material	S55C
Nut Material	SCM415H
Spiral Direction	Right Thread
Using Grease	Alvania S2

*Regular maintenance of the ball screw with lubrication oil can effectively extend the screws life by more than 10 times.

Nut Specification											Core diameter	BCD	Recurring decimal	Reted load(N)	
LA	LB	LC	DA	DB	H	PCD	X	Y	Z	T		Ball diameter		Dynamic load Ca	Static load Coa
16	4	12	27	14	18	21	3.4	-	-	-	7.21	8.41	3x1	1200	2100
												1.2			
28	5	23	35	18	22	27	4.5	-	-	-	9.21	10.41	3x1	1200	2100
												1.2			
34	10	24	46	26	28	36	4.5	8	4.5	M6x1.0	8.4	10.5	3x1	1870	3000
												2			