模座用高剛性卸料板滾針導柱組
For Die Set High Rigidity Needle Roller Stripper Guide Set

HRSGPS 卸料版固定，單邊滾針型
Type Fixed to Stripper Plate, Single Needle Roller Type



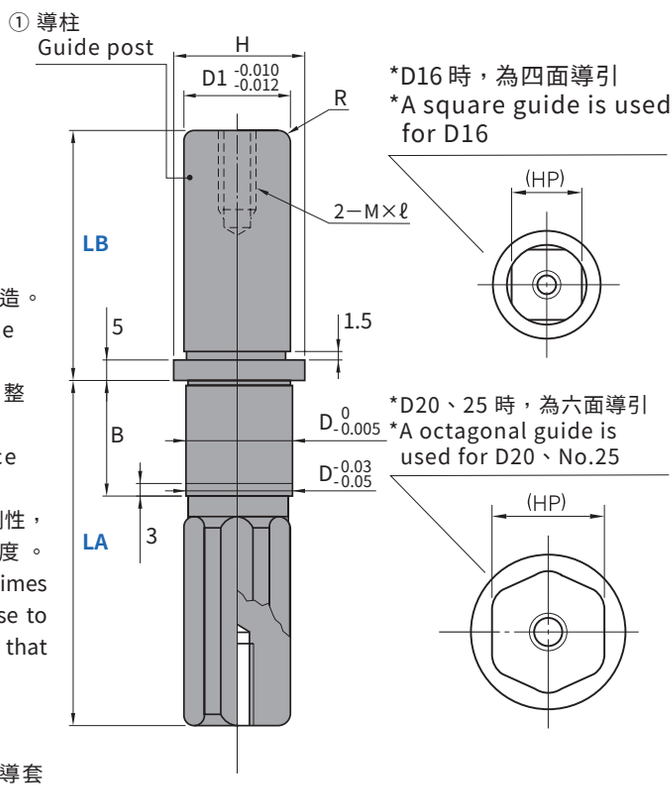

特點 Features

1. 採用將導柱固定在接近刃口(凸模・凹模)的卸料板構造。
   By securing the guide pin to the stripper plate near the blade (punch and die).
2. 為了確保提高長時間的使用、減低磨損，導柱進行了整體淬火。
   The guide posts are fully hardened to enhance their durability.
3. 滾針的接觸面積是鋼球的數倍，可實現接近滑動導向的剛性，並且具有利用鋼球導向無法實現的剛性與精度。
   The contact area of the needle rollers is several times larger than that of steel balls, achieving rigidity close to sliding guidance, and has rigidity and precision that cannot be achieved with steel ball guidance.
4. 同軸度 3mm 以內。
   Low vibration, achieving low preloading.
5. LBT則適用高鋼性鋼球襯套(HWC001)、鋼球襯套用導套(SGBBW)或精密級無給油襯套(HWC002)。
   High precision, with repeatability more than tripled, enabling high-precision stamping and cutting.

型號 Model	D	LA	LB 單位10mm Unit 10mm	① 導柱 Guide post					
				D	B	R	M×ℓ	H	(HP)
HRSGPS	16	70	40~60	16.5	16	1.5	M6×15	23	14.5
		80	40~70						
		90	50~80						
	20	80	50~70	20.5	20	2	M8×20	27	19
		90	50~80						
		100	60~90						
	25	90	60~80	25.5	25	3		32	24
		100	60~90						
		110	70~90						

TEL: 07-5377726
EMAIL: headway@hdw.com.tw

軸徑 Diameter Ø16、20、25

訂購範例 Order : HRSGPS - 16 - 70 - 40

D LA LB

構成零件 Component		
名稱 Name	材質 Material	硬度 Hardness
① 導柱 Guide post	SKS3	60~62HRC
② 導套 Guide bushing	SKS3	60~62HRC
③ 滾針襯套 Needle roller retainer	滾針 SUJ2 Needle(POM): SUJ2	60~62HRC
	保持器 超級工程塑膠 Retainer Super engineering plastic	-

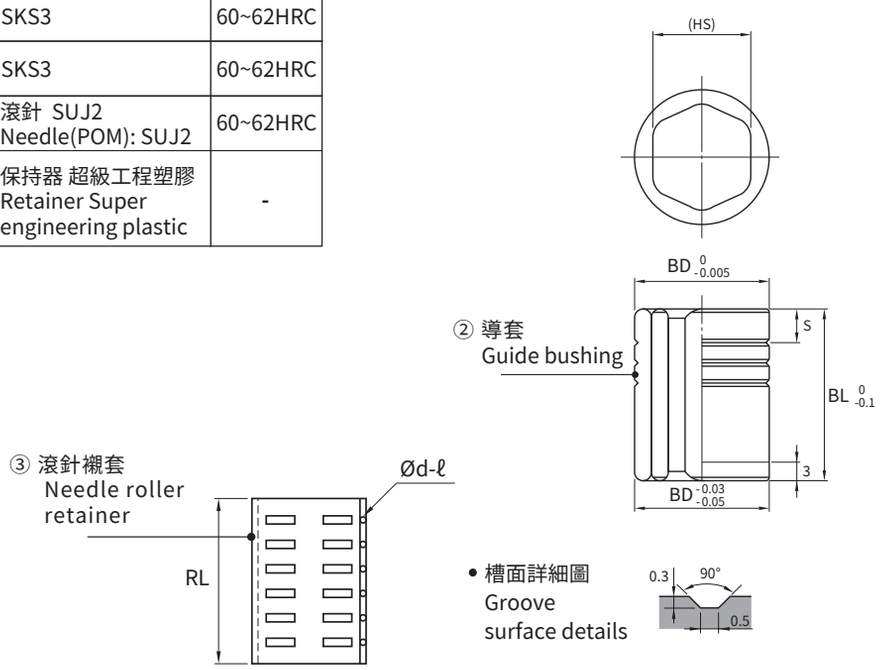

D	② 導套 Guide bushing					③ 滾針襯套 Needle roller retainer		
	BD	BL	(HS)	S	槽數 number of slots	RL	d	ℓ
16	28	40	18.5	7	3	30	2.0	6.8
20	34	50	23			46		
25	40	60	28	8		56		7.2