Millions of parts

Needle Roller Guide Set

One Solution

精挑細選，客製所求

漢德威
HEADWAY

www.hdw.com.tw

Satisfy hyper precision liner guide devices of Sub-Micron required

Needle Roller Guide Set for Die Set

Sub-Micron：100nm~1μm

High-precision and high-rigidity liner guide for nanometer ordering for semiconductor processing devices and optical devices.

The purpose to change ball roller guided to needle roller guided is to better improve rigidity、lower abrasion and lower vibration while manufacture processing and finally accomplish customer's need for hyper precision liner guide devices.

What HEADWAY promise to offer you that

1. We are on our own in Taiwan to research, develop, and manufacture, aim for cost controlling .
2. The needle roller guide set is widely applied
(1)Thin metal plate punching die set (2)PET precision punching die set (3)Motor core punching die set
3.Differences between needle roller and ball roller of guide set :
Needle Roller type : high precision 、longer service life 、high rigidity 、 easy assembly
Ball Roller type: Economic、customize for ball allocations.

Index

Chapter1 Introduction of High-Precision Needle Roller Guide Set of Die Set
1-1 Definition 01
1-2 Features of Needle Roller Type and Ball Roller Type 01
1-3 Comparison of Functions for Needle Roller Type and Ball Roller Type 02
Chapter2 Application of High-Precision Needle Roller Guide Set of Die Set
2-1 Components Basic Information 02
2-2 Application 02
Chapter3 Accuracy Standards for Needle Roller Guides and Die Set
3-1 Accuracy Standards for Needle Roller Guides and Die Set 03
Chapter4 Ordering and Alterations
4-1 Ordering 04
4-2 Alterations 04
Chapter5 Product Information and Dimension
5-1 HRGSL 05

1 Introduction of High-Precision Needle Roller Guide Set of Die Set

1-1 Definition

Needle roller is configured on the polygonal retainer, increasing the contact area from point of ball roller guide set to line contact. This achieves rigidity which is over 10 times higher compared to ball roller type, also brings more advantages of accuracy and high speed.

It can either maintain a stable precision over a long period while moving both upward and downward strokes. There is a significant difference in performance, especially in high-speed intermittent operations. The durability against vibrations is also greatly enhanced.

1-2 Features of Needle Roller Type and Ball Roller Type

1. High Precision

The excellent straightness provides outstanding linearity and achieves high precision, with a repeatability that is 3 times over than ball type.

2. High Rigidity

Roller guide set is using wider pins to amplify line contact from point contact of ball guide set, it achieves 10 times higher rigidity compared to ball type.
The roller pins enhance the rigidity between the guide pillar and guide bushing, ensuring uniform gaps between the punch head and die set. This helps a lot prevent deviations and suppresses burrs, enabling the production of high-quality products.

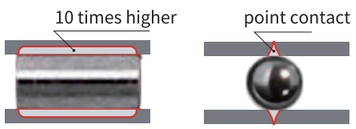

3. Low Preload (vibration)

The high preload amount of 10-25μm on ball-type guide set can lead to sudden impacts and vibrations during steel ball processing, resulting in a shortened lifespan. In contrast, the use of high-precision roller pin-type guide set with a minimal preload of 4-12μm ensures precision without any vibration. This approach successfully reduces preload while maintaining rigidity, achieving smooth rolling with ultra-low vibration.

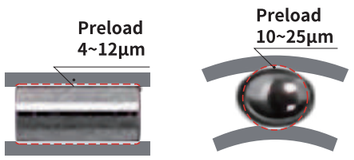

4. Longer Service Life

The adoption of roller pins ensures a smoother strokes, even during prolonged use, preventing the likelihood of damage to the punch head and die set. Additionally, it extends the maintenance cycle for the mold base.

5. Preventing Assembly Error

The polygonal configuration and identification marks of roller pin type help prevent incorrect installation.

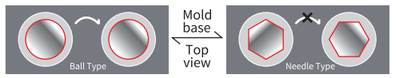

1-3 Comparison of Functions for Needle Roller Type and Ball Roller Type

Type	Feature	Rigidity	Load	Accuracy	Rotation	Entry Impact	Friction	Speedy	Service Life
Needle Type	High Rigidity High Precision Easy Assembly Longer Service Life	◎	◎	◎	○	○	△	○	◎
Ball Type	Economical	△	△	○	×	△	◎	◎	○

Symbol representation：Excellent ◎ Good ○ Fair △ Poor ×

2 Application of High-Precision Needle Roller Guide Set of Die Set

2-1 Components Basic Information

(1) Guide Bushing：Hardness 60~62HRC
Raceway roughness：Ra0.1μm
(2) Needle Roller Retainer:：Engineering plastic, a single-piece structure
(3) Guide Pillar：Hardness 60~62HRC
Raceway roughness：Ra0.1μm
(4) Alignment Mark：Align both guide pillar and guide bush refer to the alignment mark, ensuring best operation with concentricity
Concentricity: < 3um

2-2 Application

(1) Thin metal plate punching die set ：
eg. Motor core 、 printed circuit boards、fils、card、lead frame, etc.
(2) Electricity precision punching die set：
eg. connector、switch、circuit breaker components、precision punching, etc.
(3) Specialized machinery and precision machinery
(4) Resin materials applied of precision stamping mold：
eg. PET precision punching die set

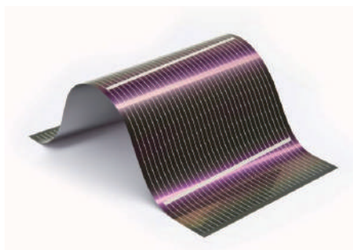

3 Accuracy Standards for Needle Roller Guides and Die Set

3-1 Accuracy Standards for Needle Roller Guides and Die Set

Inspection item	Measurement method	Tolerance
Surface roughness of holder	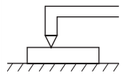	Reference surface: 3.2; Upper/lower surface: 0.8; Other surface: 6.3
Parallelism of upper/lower surfaces for punch holders and die holder	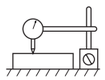	Nominal size (length of longer side): 100 or less / 200 or less / 300 or less / 600 or less; Accuracy: 0.004 / 0.008 / 0.01 / 0.015
Perpendicularity of die holder bottom surface and guide post	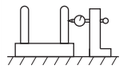	0.01/100 or less
Parallelism after assembly	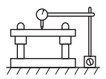	Nominal size (length of longer side): 100 or less / 200 or less / 300 or less / 600 or less; Accuracy: 0.008 / 0.012 / 0.02 / 0.025

Precaution

1. Select an appropriate guide pillar length so that the guide bushing will not separate from the guide pillar top head center during press processing
2. When installing high-precision needle roller guide set, please be careful not to generate rotational torque between the guide pillar and the guide bushing.
3. When designing, please take care to prevent the guide bushing from disengaging from the needle roller retainer during the operation of the mechanism.
4. Periodically lubricate the needle roller guide set to better maintain die set
5. Please use it within the temperature range of 0 to 80 degrees Celsius, as per the requirements.
6. The minimum stroke of the roller guide must be equal to or larger than the roller diameter $\phi d \times \pi . A$ stroke shorter than this will cause stress to be applied at certain rollers only; resulting in rapid deterioration of roller guide performance
7. If scraps or other debris collect in the roller guide, protect the guide using a cover.
8. Do not modify the roller guide. (Doing so may make it impossible to achieve the designated accuracy and performance.)

Comparison of Guide Pillar Deflection

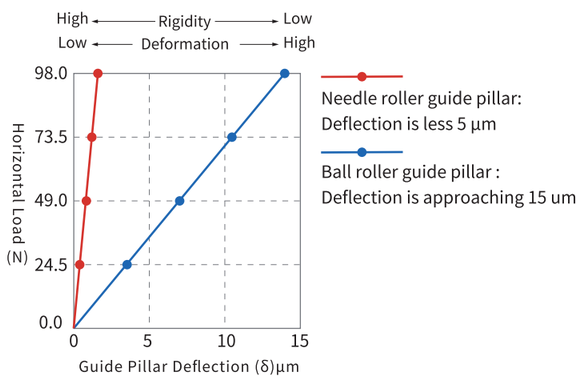

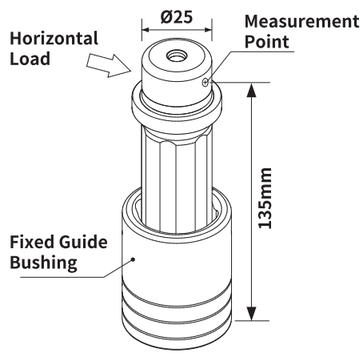

Deflection test curve showed, it is observed that under horizontal loads, the deflection (deformation) of the needle roller exhibits excellent rigidity performance.The deformation of the needle roller is lower than that of the ball roller with a difference of up to 10 times.

Tips：
Deflection is a measure used to assess the "relative positional change" (or known as "deformation") of a structural element under external forces.

4 Ordering and Alterations

4-1 Ordering

H R G S L - S K S 3 - 1 3 - 7 0 - 3 0 - (L C)

- Model
- Material: SKS3 - Tool Steel; SUJ2 - Bearing steel
- External diameter of guide post D
- Length of guide post L
- Spring length FL
- Processing items

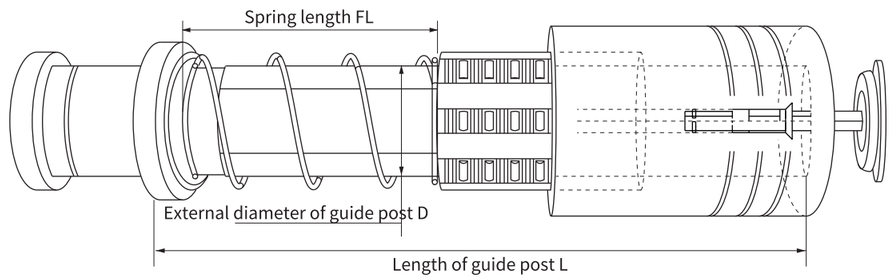

4-2 Alterations

Code	LC	LAC
Processing content	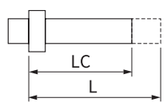	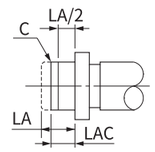
Description	Change L Length D / Designated Units: 13 / 70<LC<120; 16 / 75<LC<135; 20 / 75<LC<140; 25 / 95<LC<160; 28 / 95<LC<180; 32 / 115<LC<180	Change LA Length LA/2+1≤LAC<LA Designated Units：1mm Thread length will be shortened.

Movable stopper HRGSL

Diameter Ø 1 3 ~ Ø 3 2

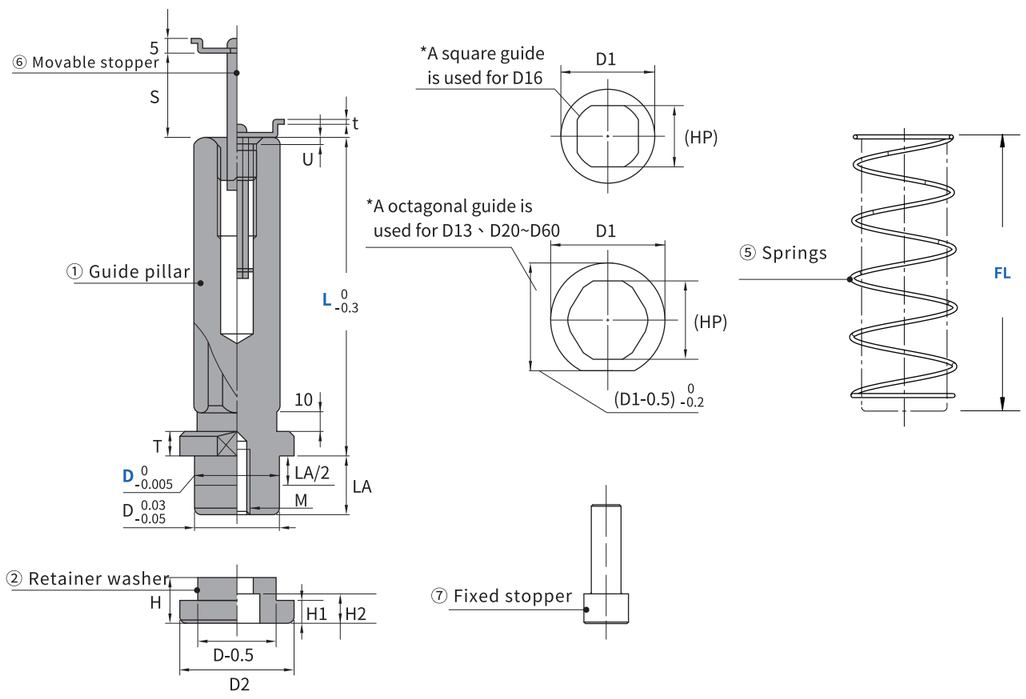

Model	D	Specified the unit 5mm		Guide post										Hexagonal bolts	Movable stopper	
		L	FL	D1	D2	LA	H	H1	H2	(HP)	T	M	U		t	S
HRGSL	13	70~120	30~100	19	17	12	7	3	5.5	11	5	M5X8	2.5	M5X10	-	-
	16	75~135	30~110	24	22	16	10	4	6.5	14.6	6	M6X10	4.3	M6X10	1.2	11
	20	75~140	40~120	29	28	16	14	7	8.5	19	8	M8X20	3.0	M8X15	1.6	20
	25	95~160	60~140	35	35	18				24			3.5			25
	28	95~160	50~140	37	36	20	16	8	10.5	26.7	10	M10X20		M10X20		27
	32	115~180	70~155	42	40	23				31		M10X25				28

Needle ball retainer

Features

1. The rigidity is over 10 times higher for f line contact of needle roller guide
2. Straightness is 2 times higher.
3. Better disperse the pressure of die set, extending service life
4. Low vibration to achieve low preload
5. Repeatability is over 3 times than ball roller type.

Component		
Name	Material	hardness
① Guide pillar	SKS3 / SUJ2	60~62HRC
② Retainer washer	S45C	-
③ Guide bushing	SKS3 / SUJ2	60~62HRC
④ Needle roller retainer	Steel ball SUJ2	-
	Retainer Super engineering plastic	
⑤ Spring	SWP-B	
⑥ Movable stopper	S45C / SPC-1	
⑦ Fixed stopper	SCM435	38~43HRC

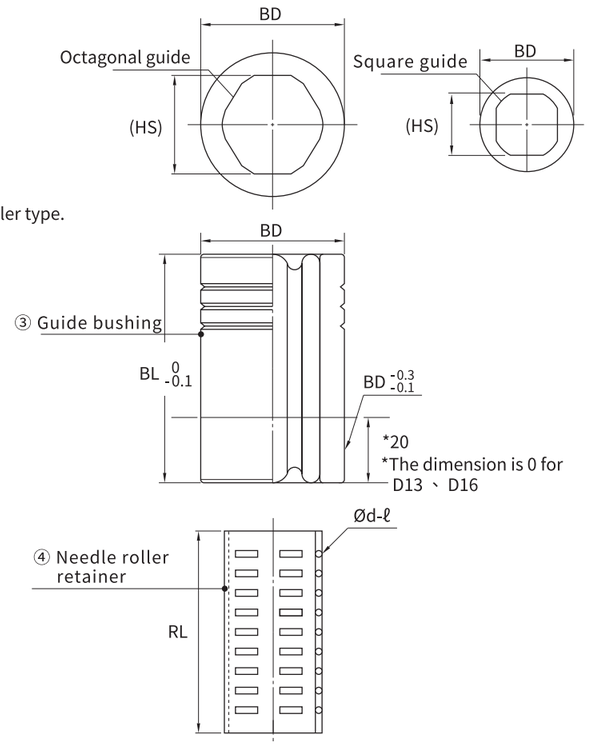

D	Guide bushing					Needle ball retainer			
	BD		BL	(HS)	number of slots	RL	d	ℓ	Amount of needle
13	23	0 -0.006	40	15	3	30	2.0	4.8	45
16	30			18.6		30		6.8	24
20	37	0 -0.007	60	23		52			48
25	45		70	28		62		7.8	54
28	47		75	31.7		66	2.5		60
32	55	0 -0.008	78	36	4	68			

© 2022 Headway 漢德威.

精挑細選，客製所求

Millions of Parts, One Solution.

TEL +886-7-5377726
FAX +886-7-5377728
MAIL headway@hdw.com.tw
Addr No. 23, Shangfa 1st Rd., Daliao Dist., Kaohsiung City 831, Taiwan
Http www.hdw.com.tw

Headquarters
-HEADWAY TRADING CO., LTD.

Branches
-HEADWAY JAPAN CO.,LTD
-SHANGHAI HANYUN Precision Machinery Trade CO.,LTD